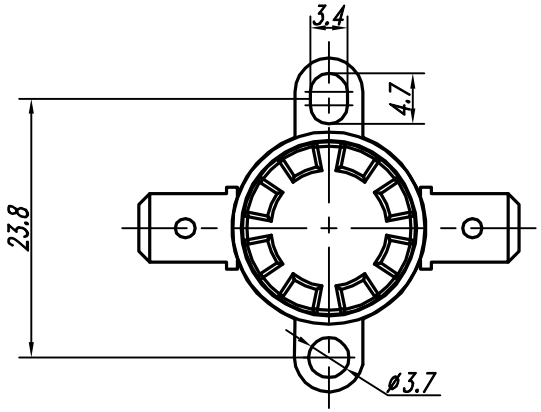

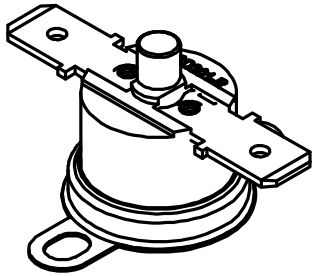

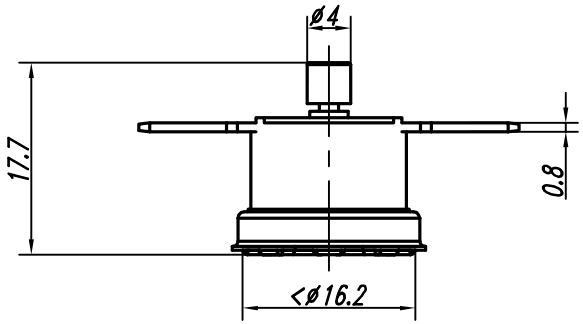

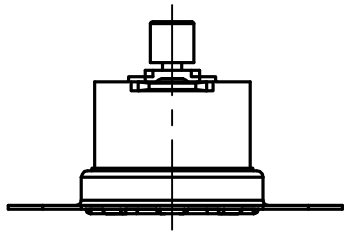

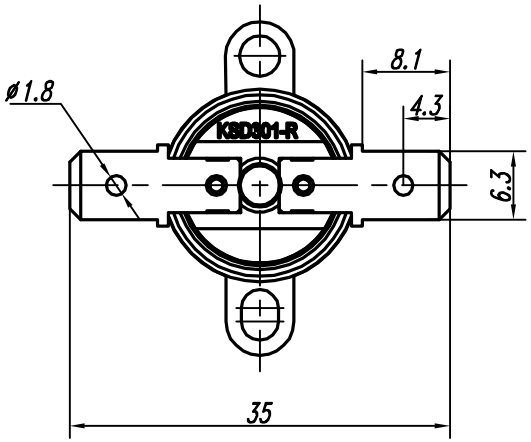

Rate Volts Rated Amps	AC250V 50Hz/60Hz 16A（resistive load） AC125V 50Hz/60Hz 16A（resistive load）
Contacts	S.P.S.T open on temperature rise
Insulation Resistance	More than 10MΩ (with DC 500V megger)
Dielectric Strength	AC 50HZ , 1500V for one minute,no breakdown and no flashover
Heat Resistance	140°C
Response Gradient	≤1℃/min (By air)
Life(resistive load)	more than 10,000 cycles;
Method of earth	By means of the metal cup of thermostat connected in the earthing metal part
Approved	TUV UL
Series	KSD301-R

Part No.	Type	Temperature Range	
		Open	Close
CS140081-1	**KSD301-8.0/16BT15R9**	***80±3°C***	-- --
CS140081-2	**KSD301-9.0/16BT15R9**	***90±3°C***	-- --

标 记	数量	更改单号	签 名	日期

Design	黎燕筠
Auditing	
Date	2014-2-14

Snap-Action Thermostat

CS140081

图 样 标 记	版 本	比 例

共 张 第 张

FOSHAN TONGBAO HUALONG CONTROLLER LTD